Shake Table

The Quanser Shake Table is an instructional shake table device to be used to teach structural dynamics, vibration isolation, feedback control, and various other topics for mechanical, aerospace, and civil engineers. The top stage of the shake table is driven by a powerful motor that allow it to achieve an acceleration of 2.5g when up to 7.5kg of mass is mounted. The stage rides on two ground-hardened metal shafts using linear bearings which allows for smooth linear motions with low path deflection. When starting from center the stage is capable of moving 7.62cm, or 3-inches, on each side. It therefore has a total travel of 15.24cm. In order to move the top platform at a high acceleration, a robust ball-screw and motor assembly is used. The high-powered 400Watt motor is a 3-pliase brushless DC actuator. The motor contains an embedded high-resolution encoder that allows the position of the stage of be measured with an effective linear resolution is 3.10pm. An analog accelerometer is mounted on the Shake Table platform in order to measure the acceleration of the stage directly.
Shake Table can be used separately or with the 1-floor and 2-floor active mass damper experiments.

Wiring schematics

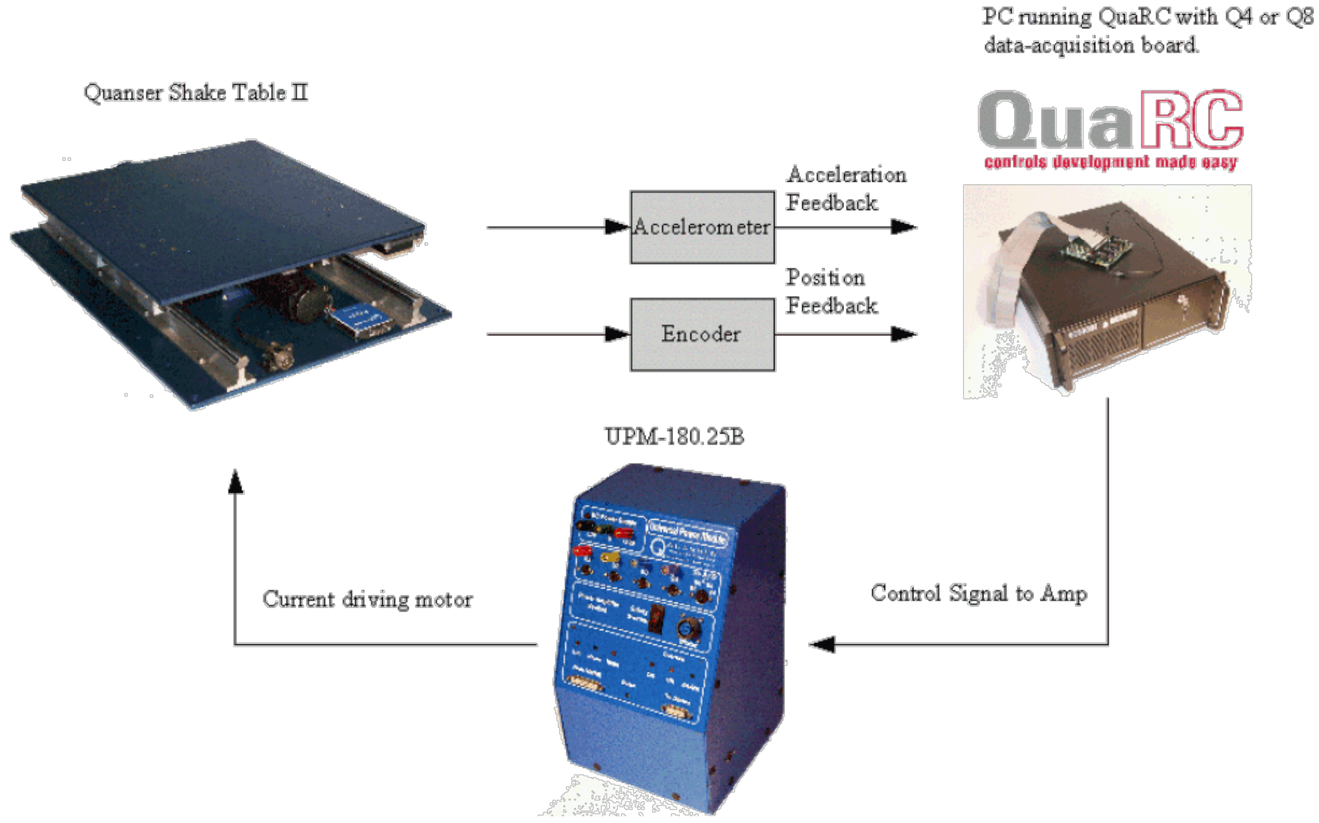

PD + feedforward controller

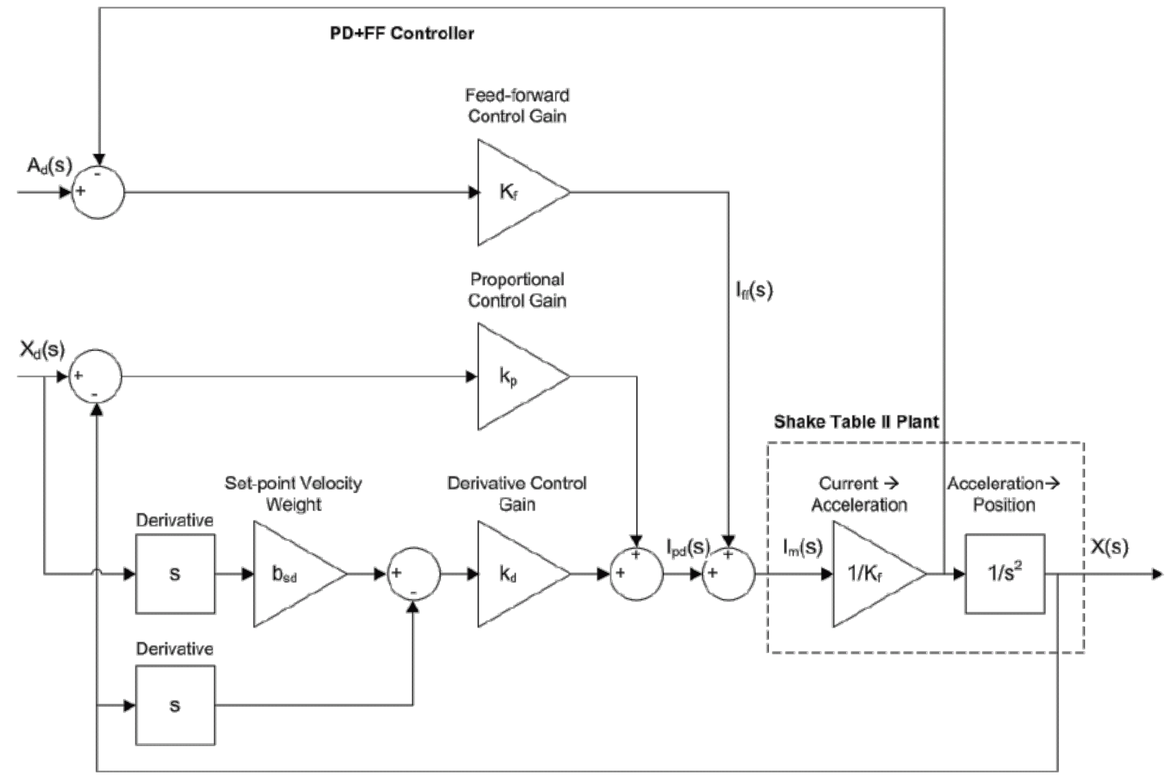

$$\frac{X(s)}{X_d(s)} = \frac{k_p + k_d s b_{sd}}{K_f s^2 + k_p + k_d s}$$

M_l (kg)	M_t (kg)	f_0 (Hz)	ζ	k_p (V/m)	k_d (V.s/m)
0.0	7.74	15.0	0.75	2425.4	38.6
2.5	10.24	15.0	0.75	3208.8	51.1
5.0	12.74	15.0	0.75	3992.2	63.5
7.26	15.0	15.0	0.75	4700.4	74.8

Input generation

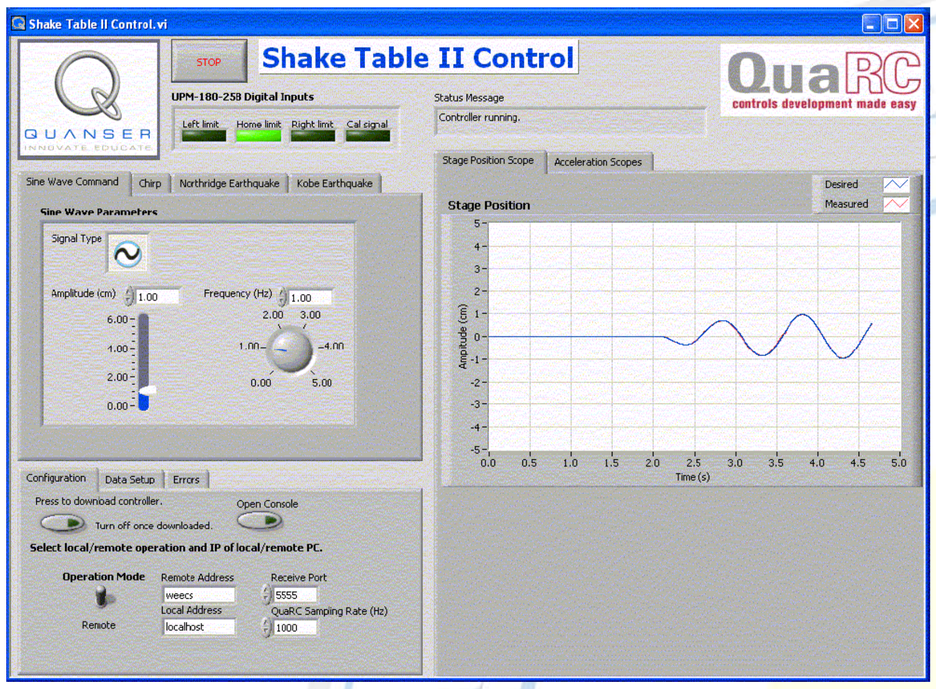

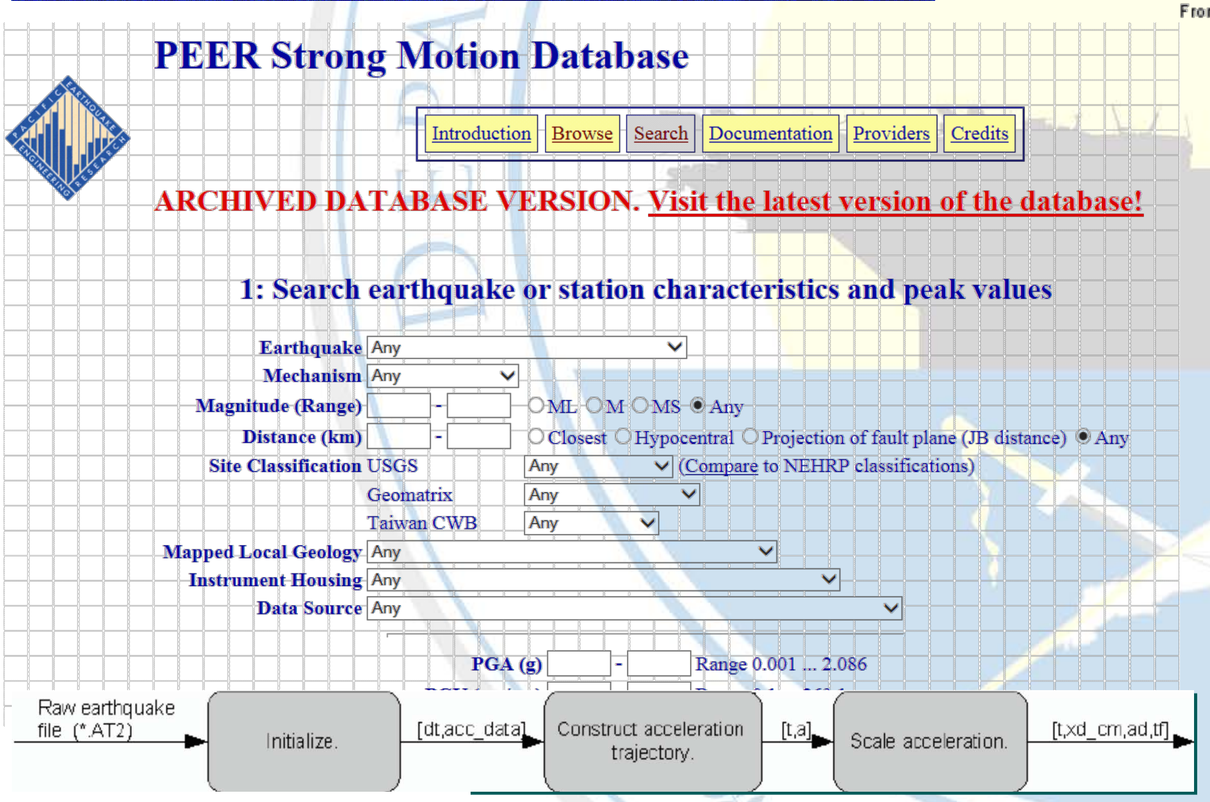

Simulink block diagram

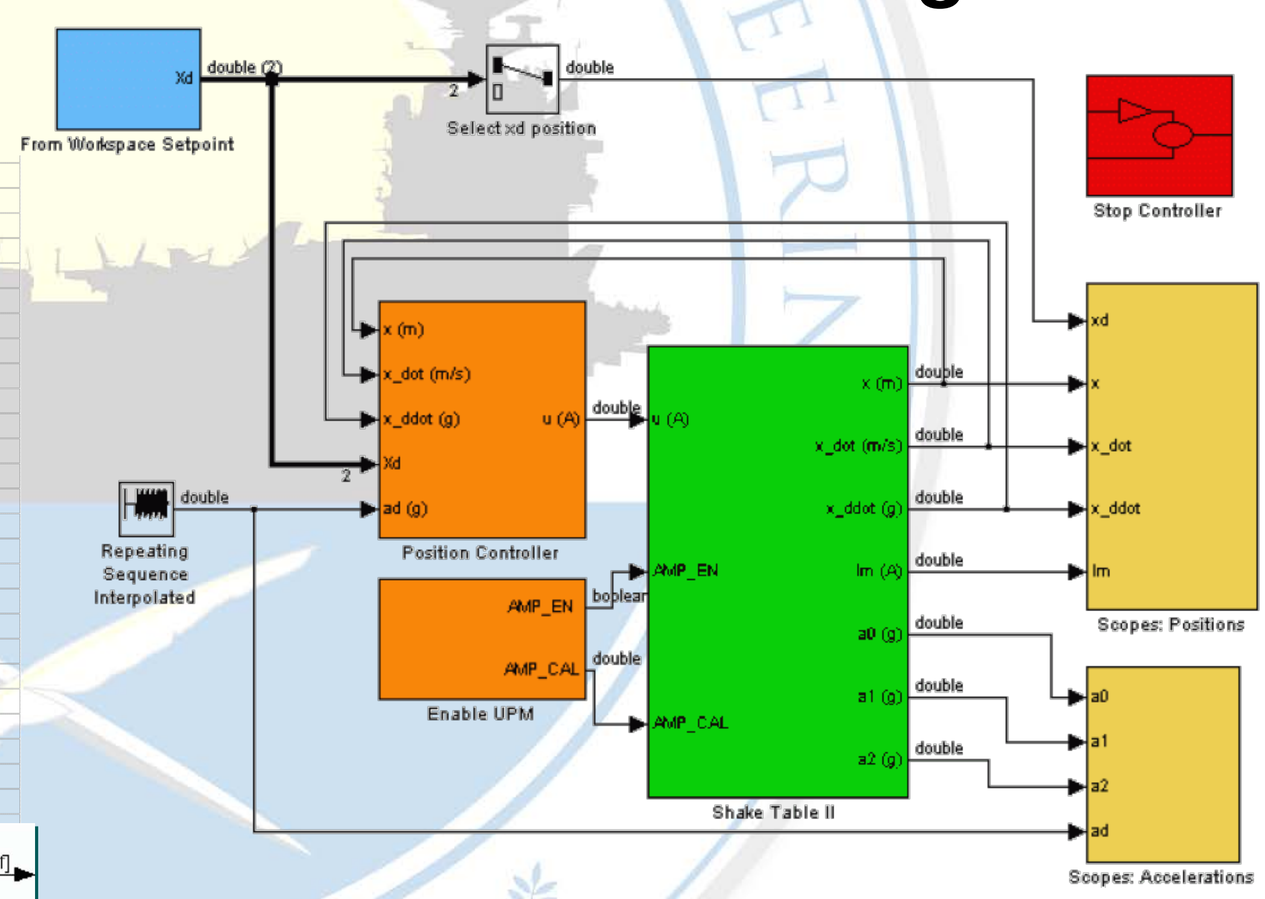

PoC: Prof. **Oleg Yakimenko**, Bu-223
oayakime@nps.edu, (831) 656-2826

CRUSER
Consortium for Robotics and Unmanned Systems Education and Research

SYSTEMS ENGINEERING
ESTABLISHED 2002